CAMBION®

Technical Data Sheet

Cambion Electronics LTD
Castleton, Hope Valley, Derbyshire, S33 8WR, England
Telephone: +44(0)1433 621555 Fax: +44(0)1433 621290
Web: www.cambion.com Email: enquiries@cambion.com

460-3308 Connector Pin For Patch Lead Ends, .040 (1,02) Diameter Pin

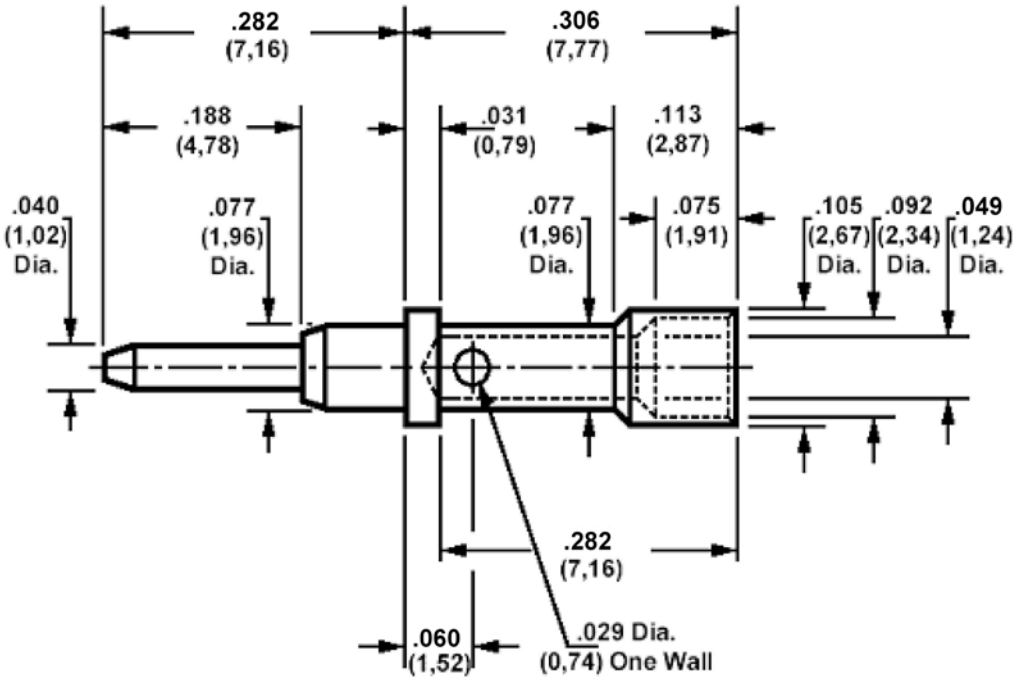

How to order code
460-3308-01-XX-00
Basic Part No XX= Plating finish

MATERIALS			
Component	**Material**	**Finish (-03)**	**Finish (-04)**
Pin	Brass	Gold over Nickel	Electro Tin

Recommended hook up wire size is 22 AWG (7 strands of 30AWG) copper wire, insulated, .053 (1,37) over insulation. (not supplied).

Will also accept 20 AWG (7 strands of 28AWG) copper wire, insulated
and
24 AWG (7 strands of 32AWG) copper wire, insulated.

Recommended crimping pliers 435-5680-01-00-00.

Copyright© Cambion® Thursday, 19 September 2019